PRODUCT DATASHEET

H SERIES

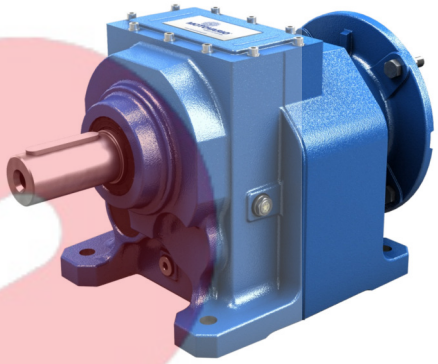

HELICAL **GEAR** REDUCER

DATE 24.07.2023
CUSTOMER 4011953

MOTOVARIO®
HEART OF MOTION
a TECO Group company

CONFIGURATION

PRODUCT DATASHEET

CHARACTERISTIC	VALUE
Regulations	No
Logo	Motovario
Brand	MV
Series	H
Helical	With Flex.Coupling PH
Red. Size	032
Version	T-Feet
Ratio (i)	14,66
Input Dim.	Ø200x24 (IEC90 B5)
PAM Flange Dim.	200
PAM Worm Diam.	24
Pump	No
Output Shaft Dim.	Ø25x50
Mounting Position	B3
CX-Oil Plugs	No Plugs (Standard)
CX-Output Oil Seal	NBR-Nitrile
CX-Input Oil Seal	NBR-Nitrile
CX-Output Bearings	Taper Roller Bearings
CX-Input Bearings	2Z Ball Bearings
CX-Lubrication	Mineral ISO VG220
CX-Notes	No
CX-Paint	Ral 5010 Blue

DRAWINGS

PRODUCT DATASHEET

Values expressed in [mm]

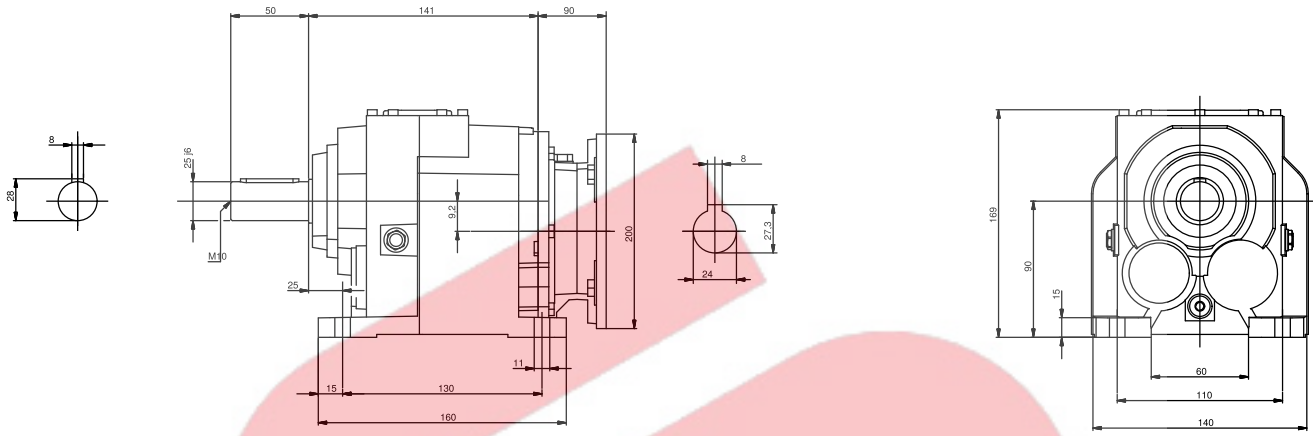

PERFORMANCES

PRODUCT DATASHEET

IH032

n1 [rpm]	Mn_2 [Nm]	i	Pn_1 [kW]	n2 [rpm]	Fr1 [N]	Fr2 [N]
500	183	14,66	0,67	34,1	970	5500
700	181	14,66	0,93	47,8	975	5457
900	179	14,66	1,18	61,4	980	4889
1140	174	14,66	1,46	77,8	990	4422
1400	170	14,66	1,77	95,5	1000	4054
1750	160	14,66	2,08	119,4	1024	3743

MOUNTING POSITIONS

The mounting position of the gear unit identifies its space orientation. B3 mounting position, as from a technical point of view, ensures lower oil splash, better lubrication and less heating.

HA1T - HR1T - HR1U

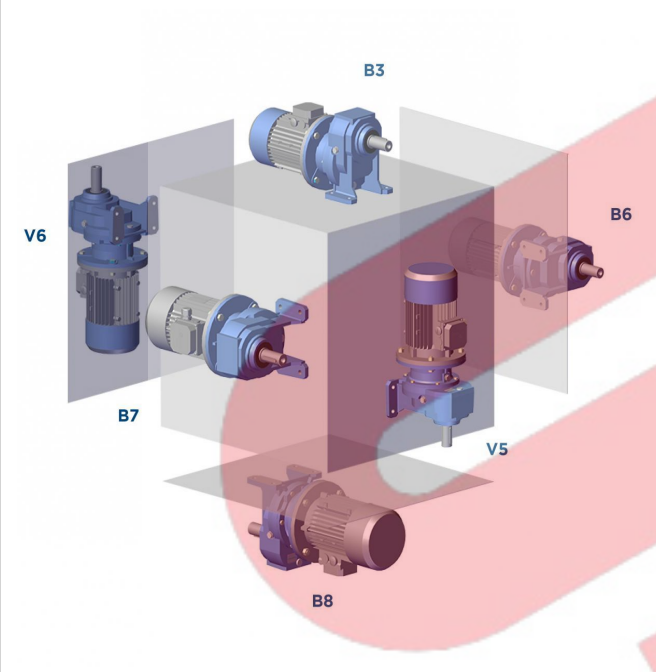

HA1F

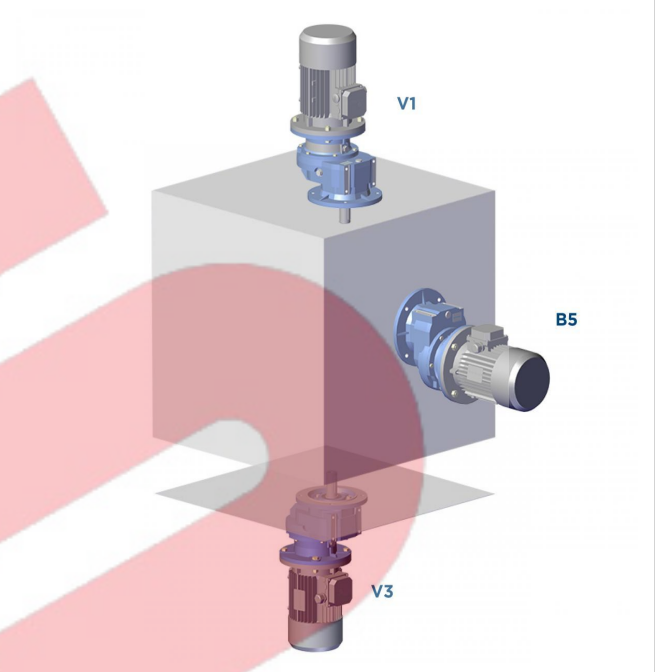

HR1F

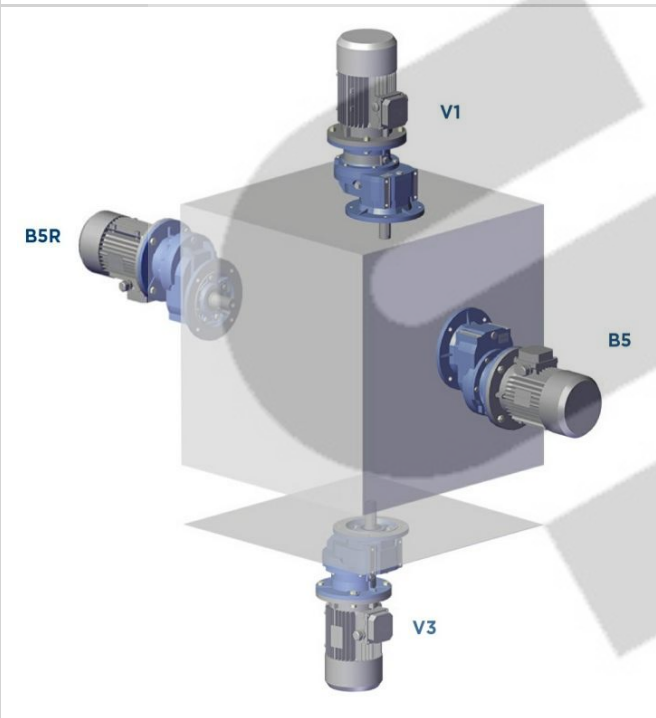

HR1M

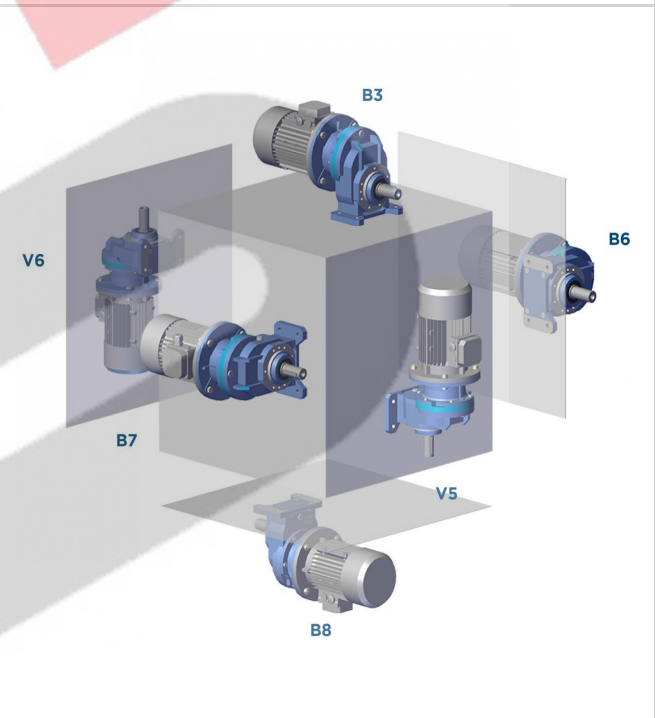

MOUNTING POSITIONS

HA2/3T - H2/3T- H2/3U	HA2/3F - H2/3F
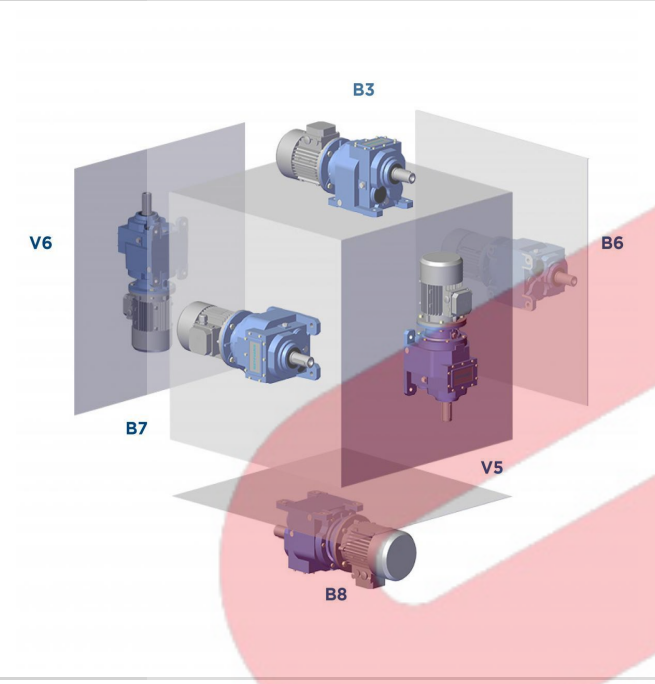	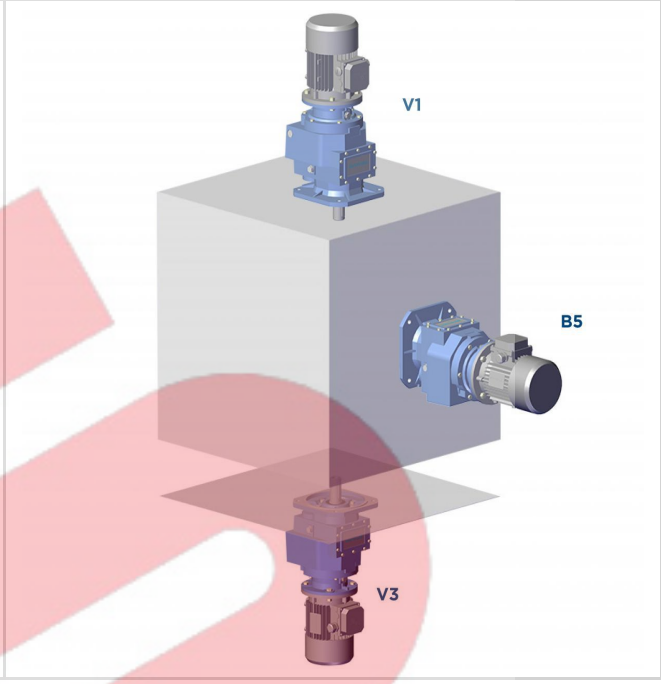

LUBRICANT

- For the gear reducer HA series with 2, 3 stages and for the reducers H series with 1, 2, 3 stages it is always necessary to specify the envisaged position.
- The gear reducer HA series with 1, 2, 3 stages all sizes, HR... series with 1 stage sizes 040, 050, 060 and H... series with 2, 3 stages sizes 030, 040, 050 are supplied complete with lubricant, have no oil plugs and need no maintenance.
- The gear reducer HR... series with 1 stage sizes 80,100,125 and H... series with 2, 3 stages sizes 060, 080, 100 are supplied complete with lubricant and are fitted with oil plugs to suit any mounting position included in the catalogue.
- The gear H... series with 2, 3 stages sizes 125, 140 have no lubricant and are fitted with oil plugs to suit any mounting position included in the catalogue. The oil filling can be done on request, in this case it is recommended, after installation, to replace the closed plug used for transportation with the supplied breather plug. When the reduction unit is supplied without lubricant, it is provided with a label to be filled.

Oil quantity in the table (litres ~) are indicative; for a proper use you will have to refer to the level plug or the dipstick. Any level difference could depend on construction tolerances, but also by the placement of the unit or by the mounting surface at the customer's premises. It is appropriate to check and, if necessary, restores the level when the units are installed.

H - CH	HA31	HA41	CHA41	A51	A61	A32	A42	A52	A62	A33	A43	A53	A63
B3-B5	0,07	0,23	0,13	0,25	0,62	0,68	0,7	1,2	1,9	1,1	1,16	1,9	2,4
B8													
B6-B7													
V5-V1								1,6	2,1			2,5	3,1
V6-V3													

HR - CHR	041	051	061	081	101	121	041M	051M	061M	081M	101M	121M
B3-B5	0,5	0,7	0,7	1,45	3,5	4,7	0,5	0,5	0,5	1,5	3,5	3,9
B5R	0,5	0,5	0,5	1,5	3,5	3,9	-	-	-	-	-	-
B8	0,5	0,5	0,5	1,5	3,5	3,9	0,5	0,7	0,7	1,45	3,5	4,7
B6-B7	0,5	0,7	0,7	1,5	3,5	4,1	0,5	0,7	0,7	1,5	3,5	4,1
V5-V1	0,5	0,7	0,9	1,5	3,5	4,7	0,5	0,7	0,9	1,5	3,5	4,7
V6-V3	0,5	0,7	0,7	1,5	3,5	4,1	0,5	0,7	0,7	1,5	3,5	4,1

H - CH	032/033	042/043	052/053	062/063	082/083	102/103	122/123	142/143
B3-B5	0,8	1,2	1,4	2,4	4,5	8,1	12,5	22,5
B8	0,85	1,2	1,4	3,1	5	8,9	12,5	20
B6-B7	1	1,2	1,8	3	4,6	8,4	12,1	22,5
V5-V1	1,3	1,75	2,15	3,9	7,6	12,7	20,5	30,5
V6-V3	1,2	1,7	2,1	4,4	7,5	14,2	21	38