TORQUE-ARM II Shaft Mount Speed Reducers

TAPER BUSHED REDUCERS - TA5215H, SINGLE AND DOUBLE REDUCTION

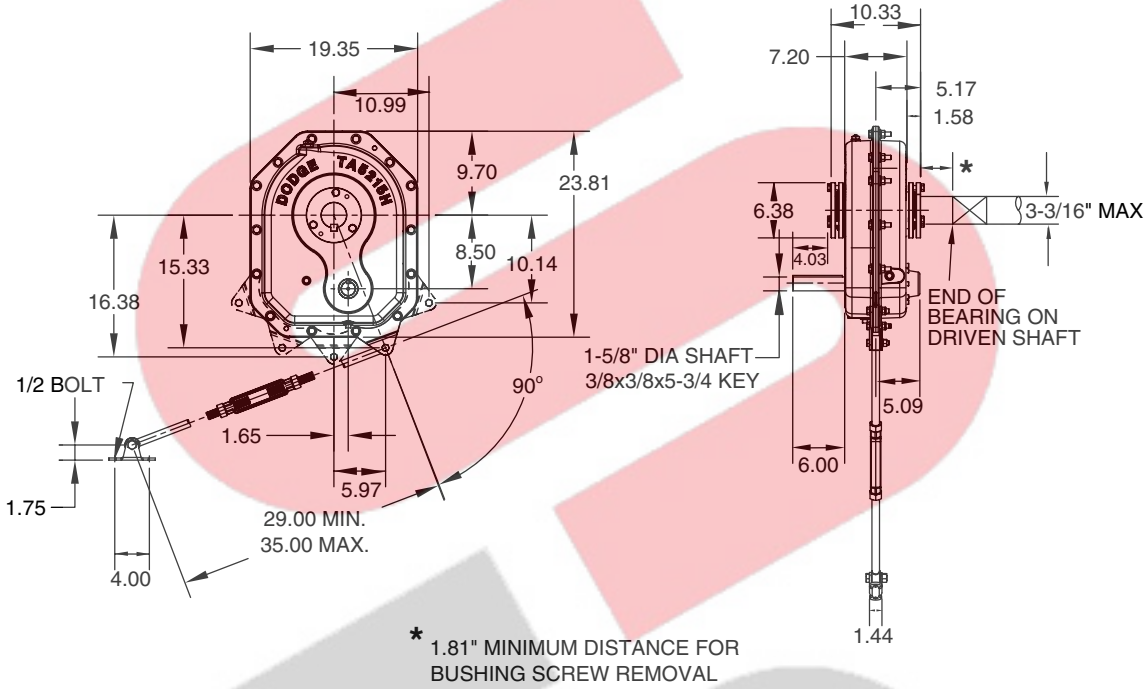

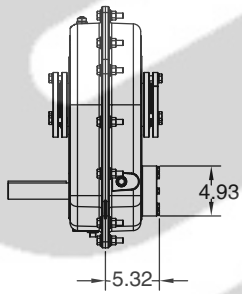

REDUCER WITH BACKSTOP

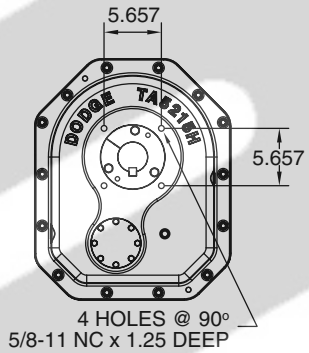

FLANGE MOUNTING DIMENSIONS

EASY SELECTION PAGE 9	SELECTION PAGE 12	RELATED PRODUCTS PAGE 123	ENGINEERING/TECHNICAL PAGE 129

TORQUE-ARM II Shaft Mount Speed Reducers

TAPER BUSHED REDUCERS - TA5215H, SINGLE AND DOUBLE REDUCTION

TA5215H Taper Bushed Reducers (1) ■

Reducer Size	Part Number	AGMA Code	Actual Ratio	Weight lbs.
TA5215H05	**905004**	215S05	5.11	259.8
TA5215H09	**905003**	215D09	9.18	274.4
TA5215H15	**905002**	215D15	14.92	273.9
TA5215H25	**905001**	215D25	25.00	272.9
TA5215H40	**905000**	215D40	38.91	272.1

(1) Reducers are supplied from stock ready for vertical mounting and for flange mounting. Rod assembly is not included with reducer. Order as a separate part number.

■ - See page 124 for Maximum Bore Straight Bore TA II Reducers

TA5215H Accessories

Description	Part Number	Weight lbs.
TA5215RA Rod Assembly (1)	**905109**	11.0
TA5215BS Backstop Assembly (2)	**905102**	8.3
TA521BS 40:1 Backstop Assembly (2)	**905103**	8.3
TA5215MM Motor Mount Assembly (182-365T) (3)	**905090**	124.8
TA5215BG Belt Guard - Pos. B (182-365T)	**905096**	101.5
TA5215BG Belt Guard - Pos. C (182-365T) (4)	**905097**	105.5
TA5215CF Cooling Fan Assembly ●	**905106**	3.0
TA4-TA12 Vertical Breather Kit	**904112**	3.0
Filter Breather Kit	**430049**	0.2

(2) See page 129 for input shaft speed necessary for backstop sprag lift-off.
(3) Motor Mount will fit NEMA and IEC frame motors; however hardware are inch dimensions.
(4) Use this belt guard for TA II reducer in screw conveyor drive applications.
● See page 122 for cooling fan dimensions

TA5215H Tapered Bushing Kits (5) (6)

Bushing Size Standard Shaft Bushing Kit	Part Number (7)	Weight lbs.	Shaft Keyseat Required (9) (10)	Bushing Size Short Shaft Bushing Kit (8)	Part Number	Weight lbs.	Shaft Keyseat Required (9) (10)
TA5215TB x 3-3/16	**905020**	13.7	3/4 x 3/8 x 10.34	---	---	---	---
TA5215TB x 3-1/8	**905057**	13.7	3/4 x 3/8 x 10.34				
TA5215TB x 3	**905021**	15.1	3/4 x 3/8 x 10.34	---	---	---	---
TA5215TB x 2-15/16 ▲	**905022**	15.6	3/4 x 3/8 x 10.34	TA5215TBS x 2-15/16	**905033**	16.2	3/4 x 3/8 x 6.36
TA5215TB x 2-7/8	**905023**	16.1	3/4 x 3/8 x 10.34	TA5215TBS x 2-7/8	**905034**	16.9	3/4 x 3/8 x 6.36
TA5215TB x 2-11/16	**905024**	16.7	5/8 x 5/16 x 10.34	TA5215TBS x 2-11/16	**905035**	18.1	5/8 x 5/16 x 6.36
TA5215TB x 2-1/2	**905025**	17.9	5/8 x 5/16 x 10.34	TA5215TBS x 2-1/2	**905036**	19.7	5/8 x 5/16 x 6.36
TA5215TB x 2-7/16	**905026**	18.1	5/8 x 5/16 x 10.34	TA5215TBS x 2-7/16	**905037**	20.1	5/8 x 5/16 x 6.36
TA5215TB x 2-3/8	**905027**	18.3	5/8 x 5/16 x 10.34	TA5215TBS x 2-3/8	**905038**	20.5	5/8 x 5/16 x 6.36
TA5215TB x 2-1/4	**905028**	18.9	1/2 x 1/4 x 10.34	TA5215TBS x 2-1/4	**905039**	21.4	1/2 x 1/4 x 6.36
TA5215TB x 2-3/16	**905029**	19.1	1/2 x 1/4 x 10.34	TA5215TBS x 2-3/16	**905040**	21.8	1/2 x 1/4 x 6.36
TA5215TB x 2-1/8	**905030**	19.3	1/2 x 1/4 x 10.34	TA5215TBS x 2-1/8	**905041**	22.2	1/2 x 1/4 x 6.36
TA5215TB x 2	**905031**	19.9	1/2 x 1/4 x 10.34	TA5215TBS x 2	**905042**	23.0	1/2 x 1/4 x 6.36
TA5215TB x 1-15/16	**905032**	20.1	1/2 x 1/4 x 10.34	TA5215TBS x 1-15/16	**905043**	23.4	1/2 x 1/4 x 6.36

▲ AGMA maximum bore size
(5) Bushing kit required to mount TA II reducer to driven shaft
(6) Bushing kit is not required to mount TA II reducer on SCS Drive Shaft in a screw conveyor application
(7) Standard Shaft Bushing Kit includes two standard bushings with back-up plates and snap rings, hardware and key
(8) Short Shaft Bushing Kit includes one standard bushing; one long bushing with insertable wedge; two backup plates with snap rings; hardware and key. This is an optional bushing for after market, short shaft mounting.
(9) Minimum keyseat and shaft length required to mount reducer with bushing kit
(10) Always check the driven shaft and key for strength