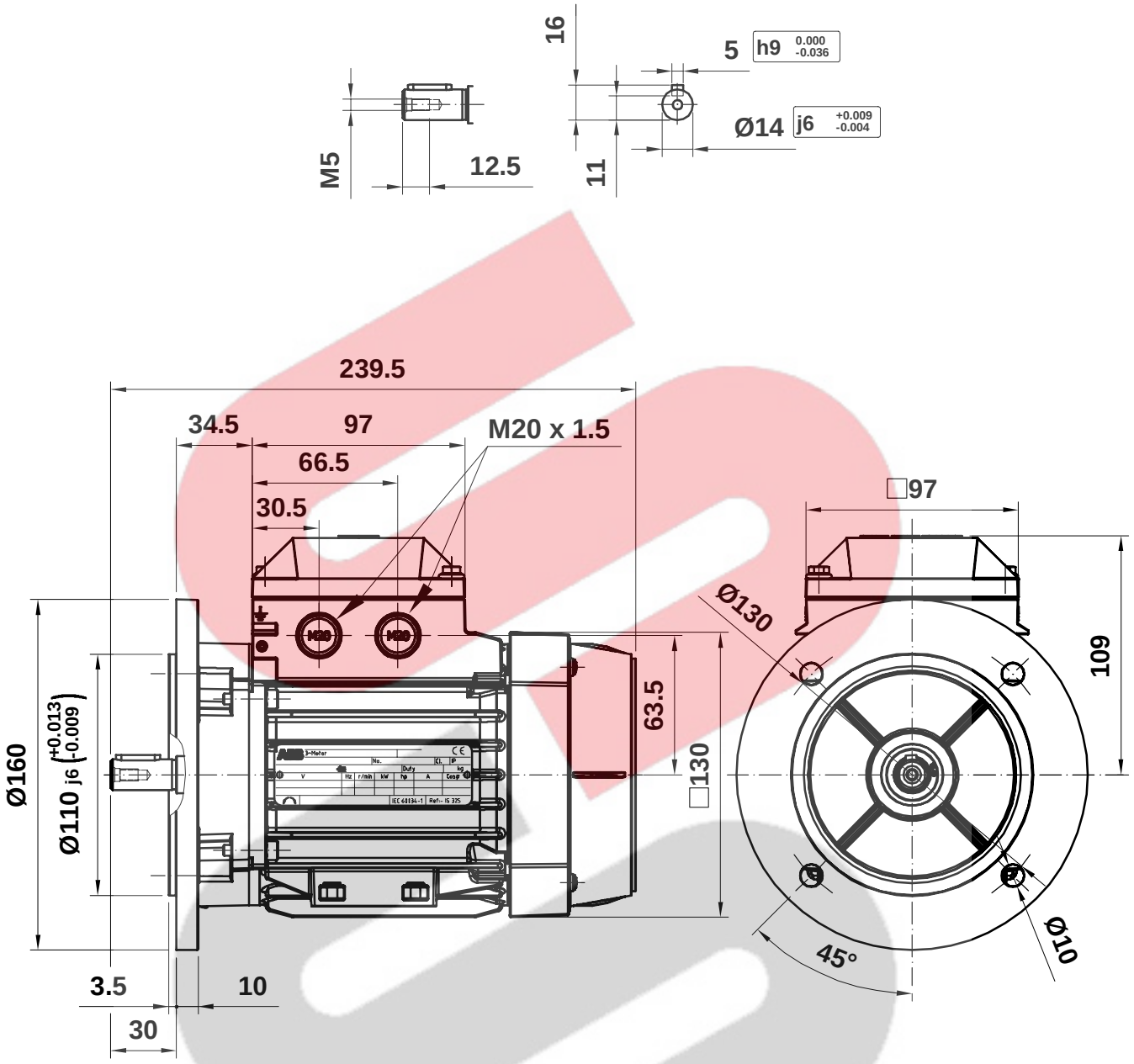

M3AA 071

Motor Dimension Print	Motor Type : M3AA 071	Document Nº : A1.5011 / 3D A2.5011

Description :

Motor flange mounted IM3001 / Motor con brida IM3001

Unit : Discrete Automation & Motion - Fáb. Motores	Issued by :	Replaces : 2010-12-03
Date : 2012-01-26	Approved by :	Replaced by :
	Customer Reference :	