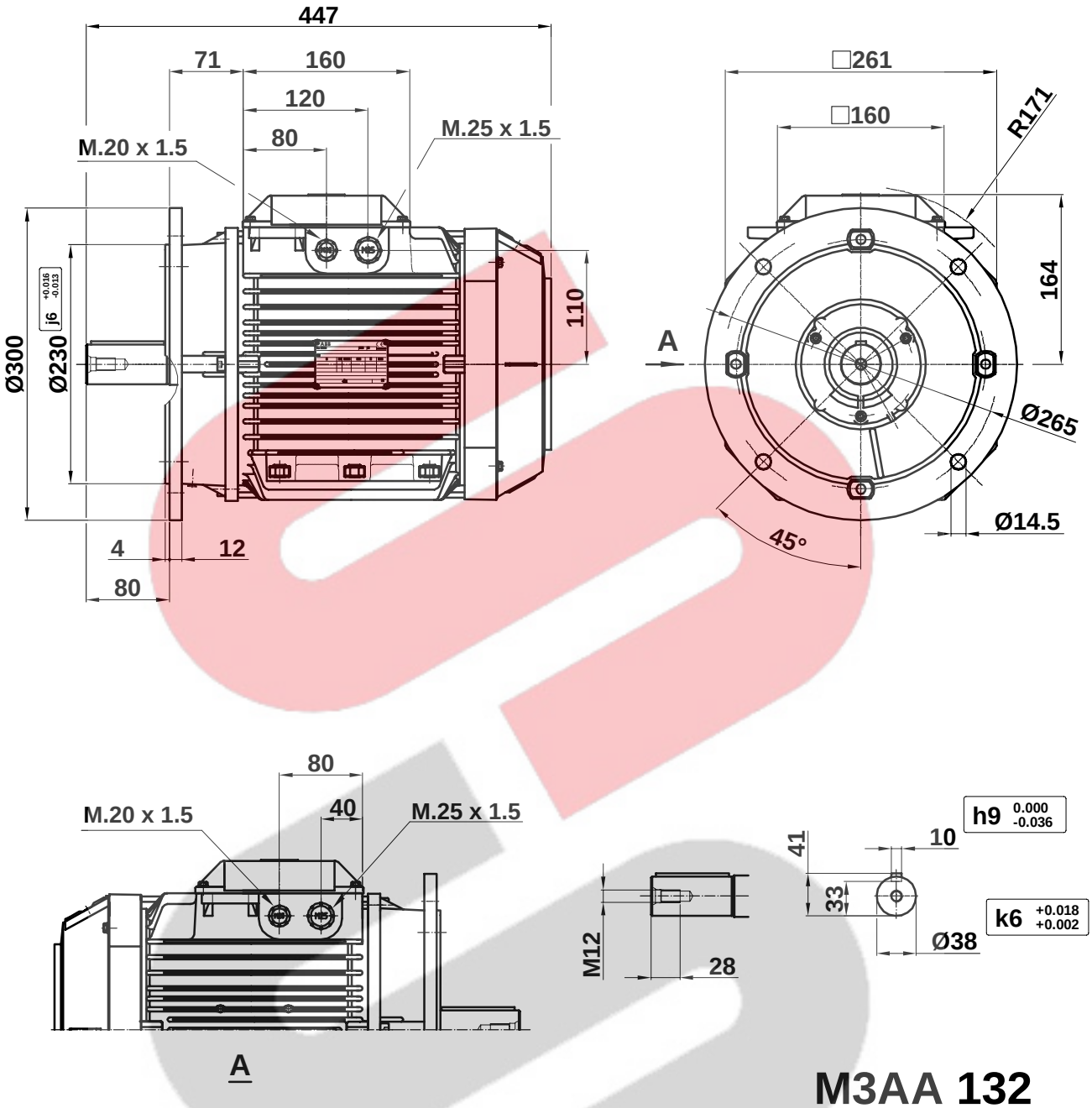

M3AA 132

Additional information:

Motor Dimension Print	Motor Type : M3AA 132 Short	Document Nº : A1.5052 / 3D A2.5052

Description :

Motor flange mounted IM3001 / Motor con brida IM3001 (FF-265)

Unit : Discrete Automation & Motion - Fáb. Motores	Issued by : PK / J.R. Cano	Replaces : to date 2009-04-29
Date : 2012-07-12	Approved by : PK / G. Blanes	Replaced by :

Asea Brown Boveri, S.A

Customer Reference :

ABB