Transmittal, reproduction, dissemination and/or editing of this document as well as utilization of its contents and communication thereof to others without express authorization are prohibited. Offenders will be held liable for payment of damages. All rights created by patent grant or registration of a utility model or design patent are reserved.

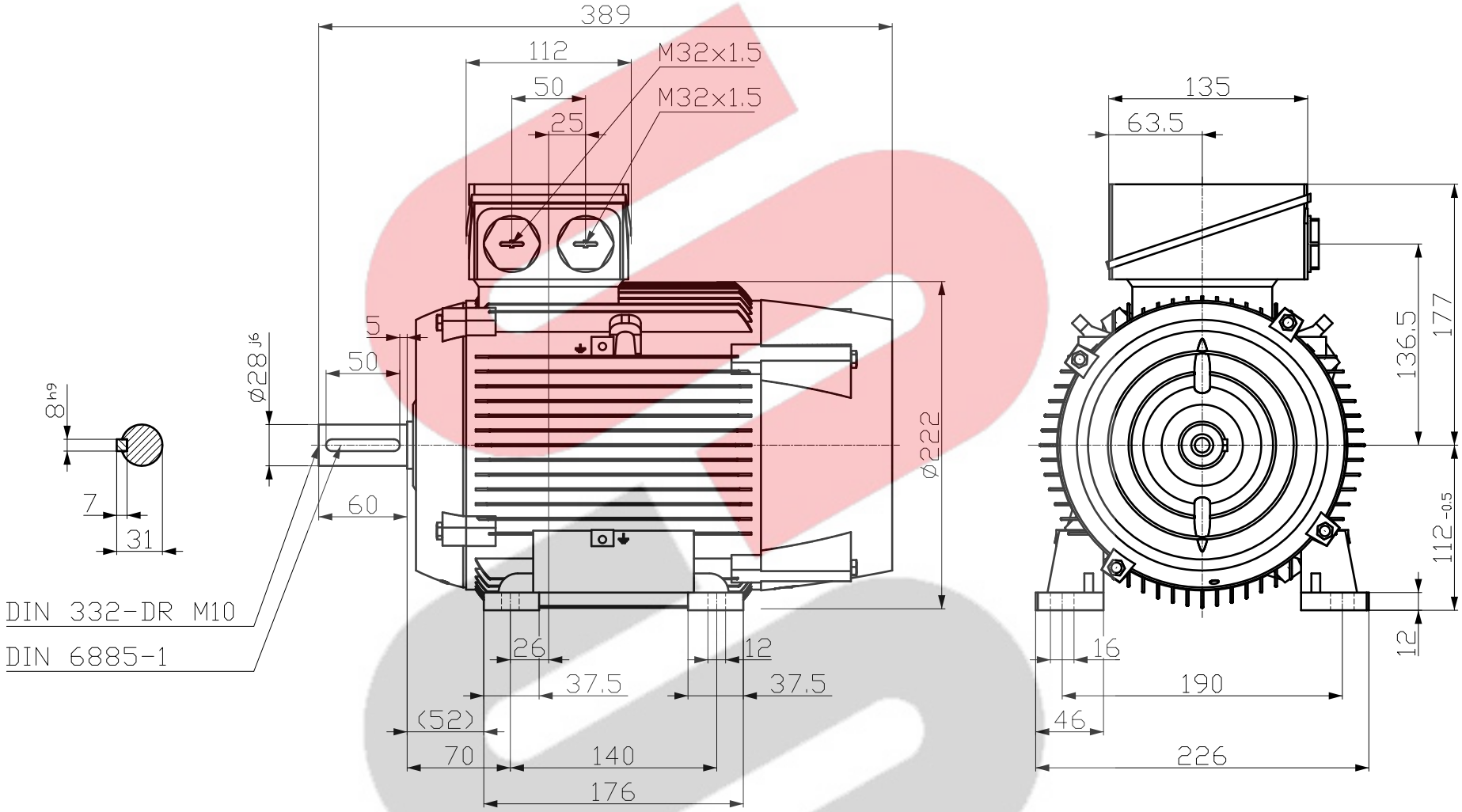

Tolerance	Surface	Material	Weight -	Scale mm
1LE1003-1BB63-4AA4-Z D04+F90+N03	Author Creator 6/08/24 SPC Approval Created automatically Department IN LVM	Dimensional drawing MaÇzeichnung		
	Change Order	MLFB		Doc Type
INNOMOTICS	Doc State Released Revision AA Index RS	Item No		Paper Size A3
		Doc No		1st Language en 2nd Language de
© Innomotics 2024	Project No -	Ref No -		Sheet 1 of 1

Technische nderungen vorbehalten!
Technical data are subject to change!

Branding disclaimer applies
Restricted